GRID LOCATION	
B202	C-G/<17

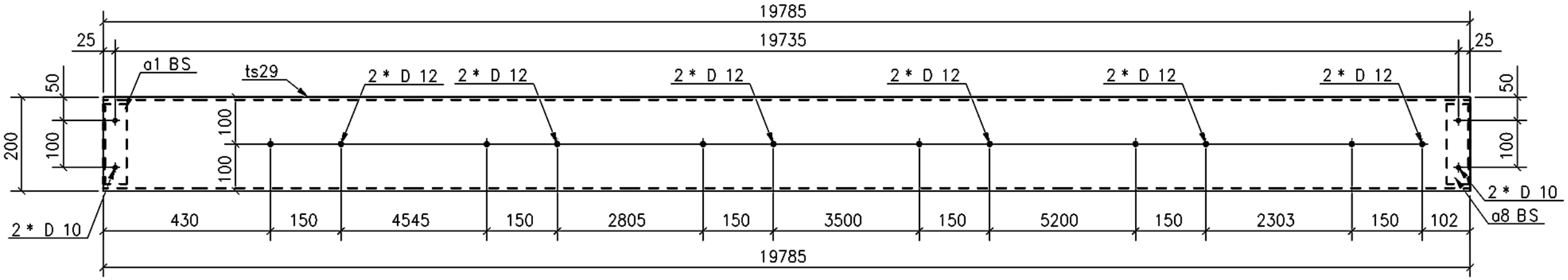

PLAN

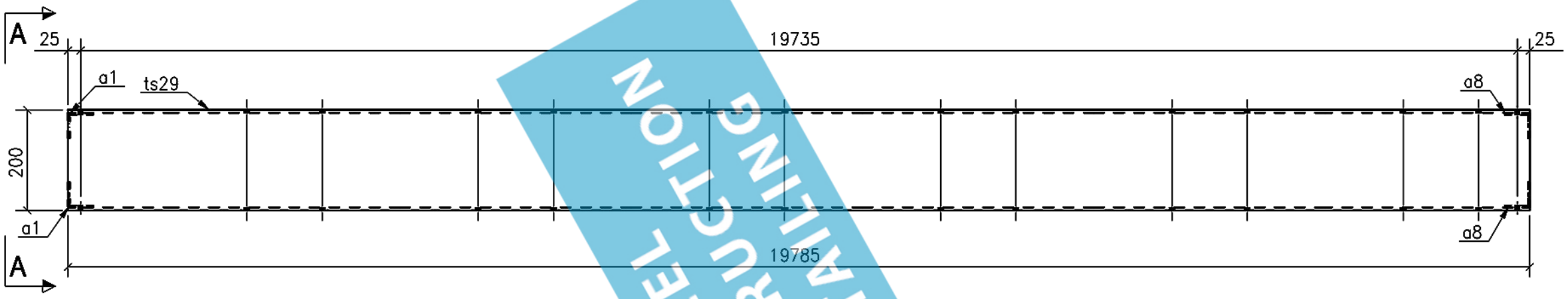

ELEVATION

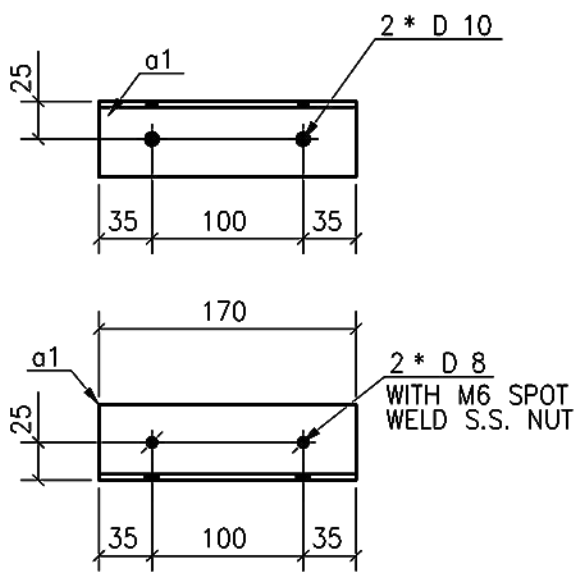

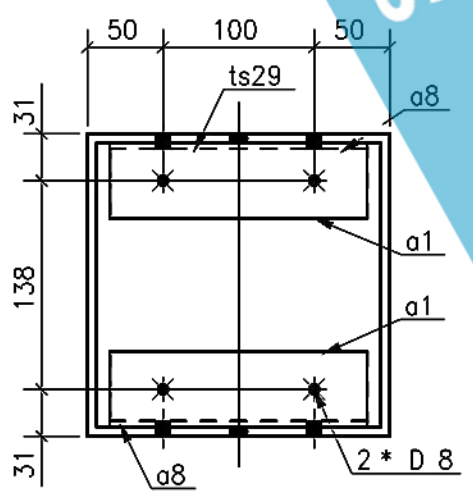

A - A

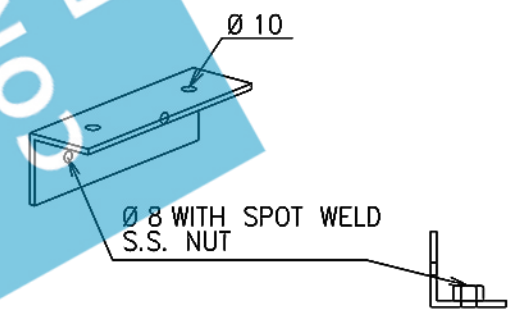

1 No BEAM Marked B202

GENERAL NOTES: ALL HOLES ARE 22.0 mm UNLESS NOTED
ALL WELDS ARE 6.0 mm F.W UNLESS NOTED

MATERIAL LIST FOR ASSEMBLY MK'D B202 1 No. Required

Mark	Profile	Material	No.	Length	Area	Weight
ts29	SHS200*200*6.0	S275J0	1	19785	15.5	717.5
a1	RSA50*50*4	S275JR	2	170	0.0	0.5
a8	RSA50*50*4	S275JR	2	170	0.0	0.5
				Total	15.7	719.6

PHASE	QUANTITY	FINISH
2	1	

No	REV MARK	REVISION DESCRIPTION	REV. DATE
2	B	REVISED AS COMMENTS RECEIVED ON 14/05/2012	15/05/12
1	A	1st SUBMISSION	30/04/12

DRAWING TITLE	BEAM		
CONTRACT	REDEVELOPMENT OF VICTORIA PARK SWIMMING POOL COMPLEX		
MODELLED BY	S.P.	ISSUED 15.05.2012	
CONTRACT NO	123456	SCALE 1:5 1:10	A3
DRAWING No	[B.202]	REVISION No. 2	

STEEL CONSTRUCTION DETAILING